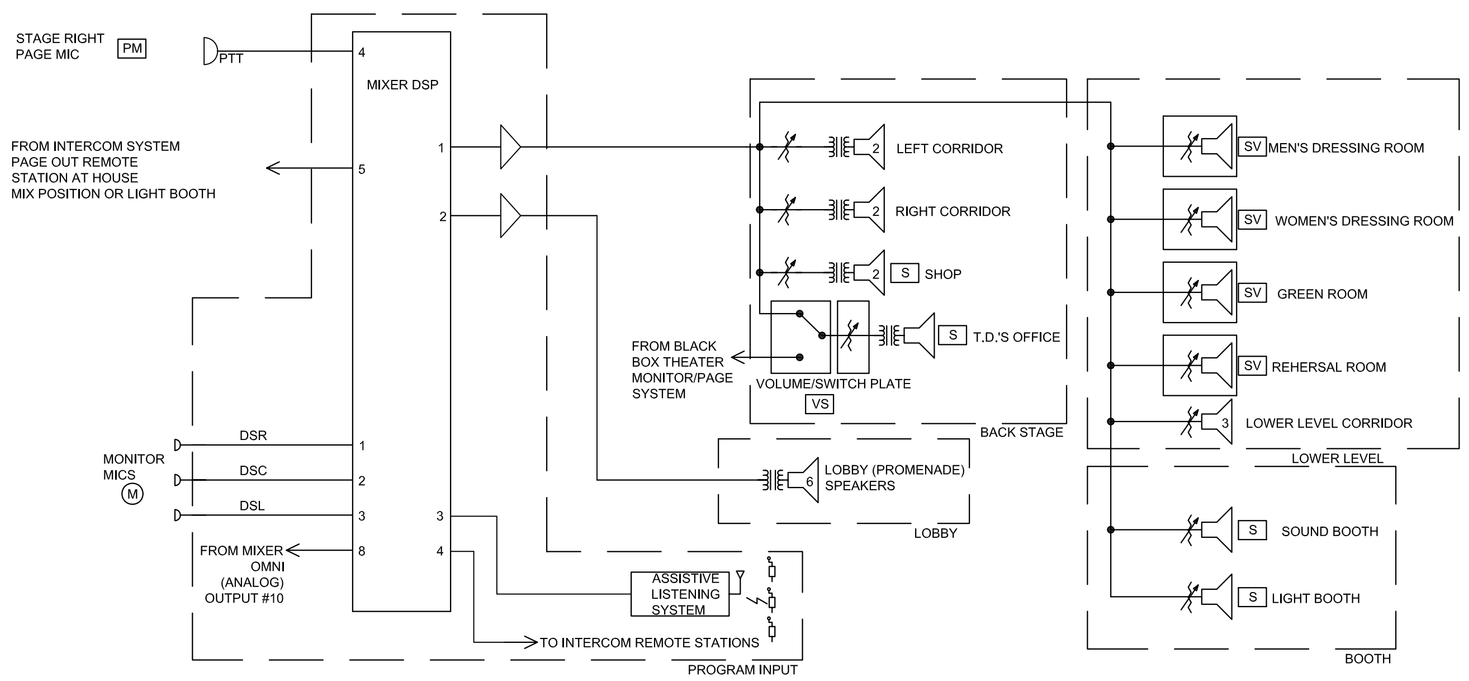

2 AV-8 BACKSTAGE, LOBBY MONITOR/PAGE, AND ASSISTIVE LISTENING SYSTEM (ALS) – BLOCK DIAGRAM

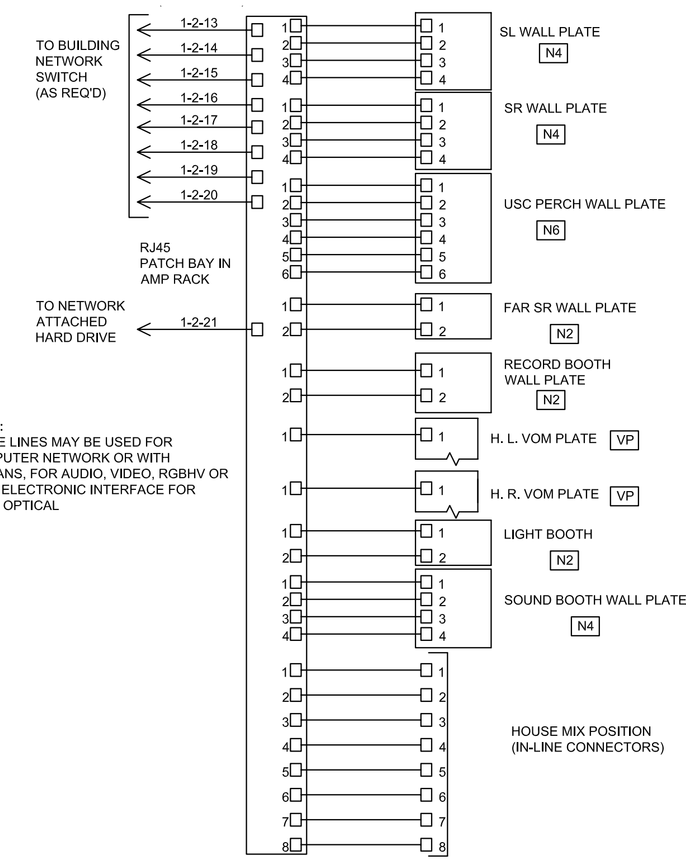

1 AV-8 CAT5E (NETWORK) TIE – LINE SYSTEM – BLOCK DIAGRAM

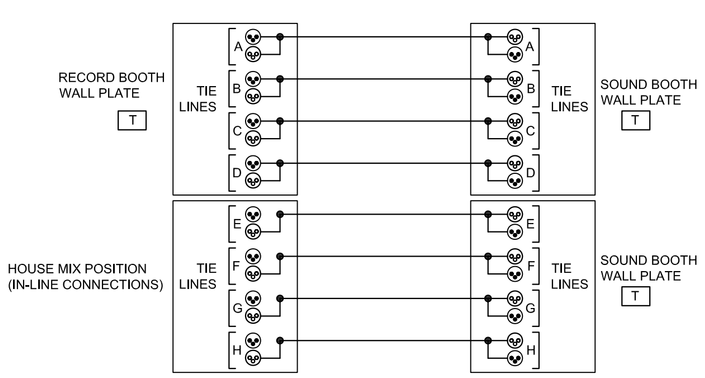

6 AV-8 TIE-LINE SYSTEM – BLOCK DIAGRAM

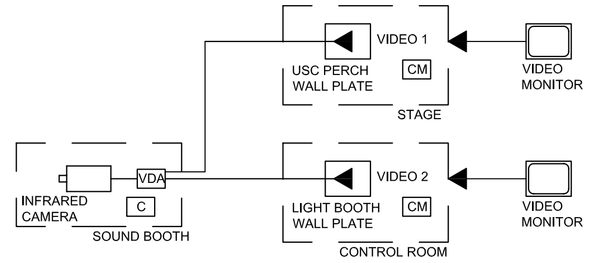

4 AV-8 VIDEO MONITOR – BLOCK DIAGRAM

(TBD–FUTURE)

3 AV-8 CUE LIGHT SYSTEM – BLOCK DIAGRAM

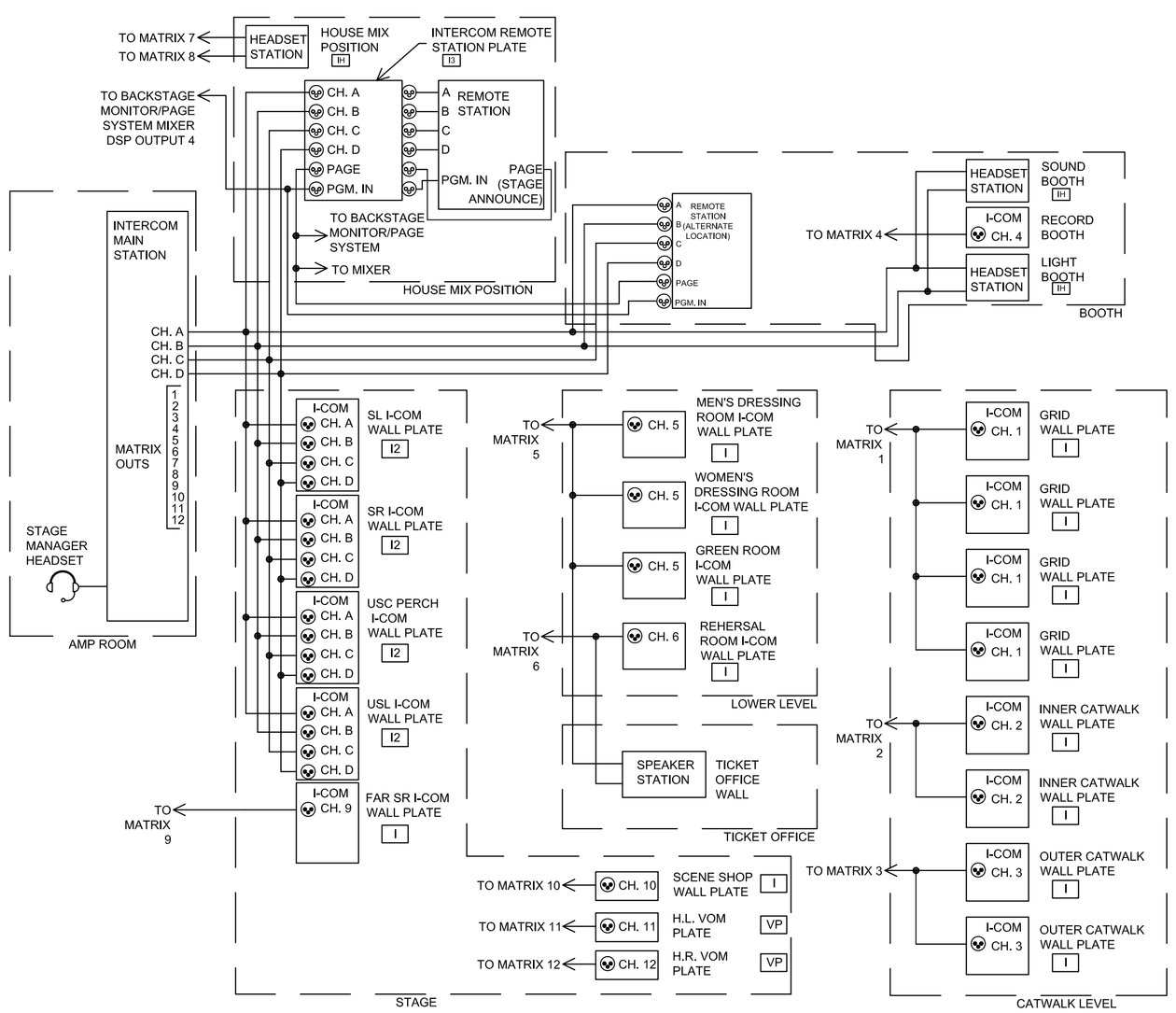

5 AV-8 INTERCOM SYSTEM – BLOCK DIAGRAM

Lipp AV Design, Inc.
CONSULTING IN SOUND & VIDEO SYSTEMS
Jeffrey Lipp
Principal Consultant
Phone: (847) 808-8790
Fax: (847) 808-8791
E-Mail: jeff@lippav.com
420 Mayfair Lane
Buffalo Grove, IL 60089
www.lippav.com

Richard B. Ingraham
RBI Computers and Audio
5020 Robinhood Dr., F-104
Willoughby, OH 44094
phone 440.942.2029

Chuck Meacham
University of Evansville Technical Director
1800 Lincoln Ave
Evansville, IN 47722
phone 812.479.2752

University of Evansville
Shanklin Theater
Sound System

ISSUE/REVISION		
	5.14.07	A/V DESIGN CONCEPT
	6.01.07	REV.1
	6.13.07	REV.2
	11.10.07	AS-BUILT
Mark	Date	Description

COMMISSION NO.

PROJECT PHASE

Drawn By: NCV Checked By: JDL

BLOCK DIAGRAMS

AV-8